CODE DIVISION MULTIPLEXING

In spread spectrum (SS), we combine signals from different sources to fit into a larger bandwidth, but our goals are to prevent eavesdropping and jamming. To achieve these goals, spread spectrum techniques add redundancy.

Spread Spectrum Techniques

- **Frequency Hopping Spread Spectrum (FHSS)**
- **Direct Sequence Spread Spectrum (DSSS)**

Code Division Multiplexing (CDM)

- CDM allows signals from a series of independent sources to be transmitted at the same time over the same frequency band.
- This is accomplished by using orthogonal codes to spread each signal over a large, common frequency band.
- At the receiver, the appropriate orthogonal code is then used again to recover the particular signal intended for a particular user.
- The key principle of CDM is *spread spectrum.*
- Spread spectrum is a means of communication with the following features:
  - Each information-bearing signal is transmitted with a bandwidth in excess of the minimum bandwidth necessary to send the information.
  - The bandwidth is increased by using a *spreading code* that is independent of the information.
  - The receiver has advance knowledge of the spreading code and uses this knowledge to recover the information from the received, spread-out signal.

Spread Spectrum

- A signal that occupies a bandwidth of B, is spread out to occupy a bandwidth of B_{ss}
- All signals are spread to occupy the same bandwidth B_{ss}
- Signals are spread with different codes so that they can be separated at the receivers.
- Signals can be spread in the frequency domain or in the time domain.

CDM / Spread Spectrum (SS)

- Basis of Code Division Multiplexing (CDM)
- Analog or digital data
- Analog signal
- **Spread data over wide bandwidth**
- Makes jamming and interception harder
- **Frequency hoping spread spectrum(FHSS)**
  - Technique transmitting radio signals by rapidly switching a carrier among many frequency channels, using a pseudorandomchannels, using a pseudorandom sequence known to both transmitterchannels, using a pseudorandom sequence known to both transmitter and receiver.
  - Signal is broadcast over seemingly random series of frequencies
- **Direct Sequence spread spectrum(DSSS)**
  - Each bit is represented by multiple bits in transmitted signal
  - Chipping code

Figure 6.27 *Spread spectrum*

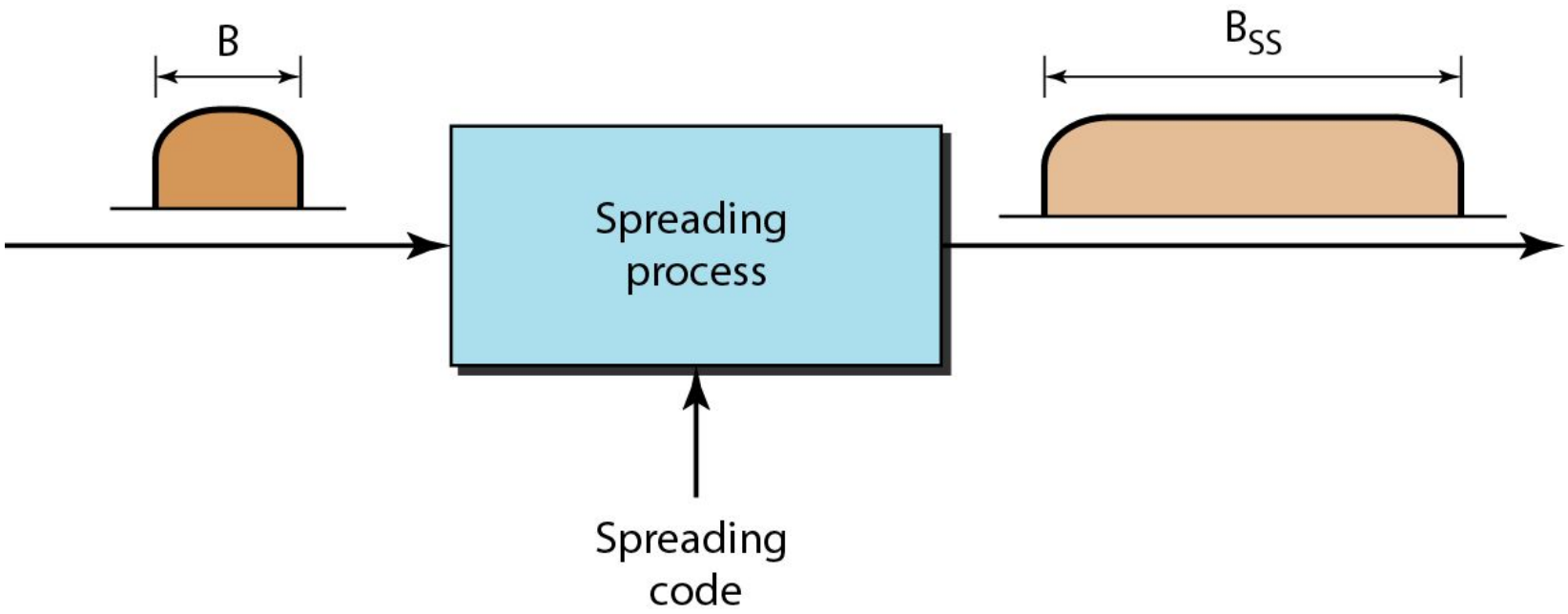

FHSS

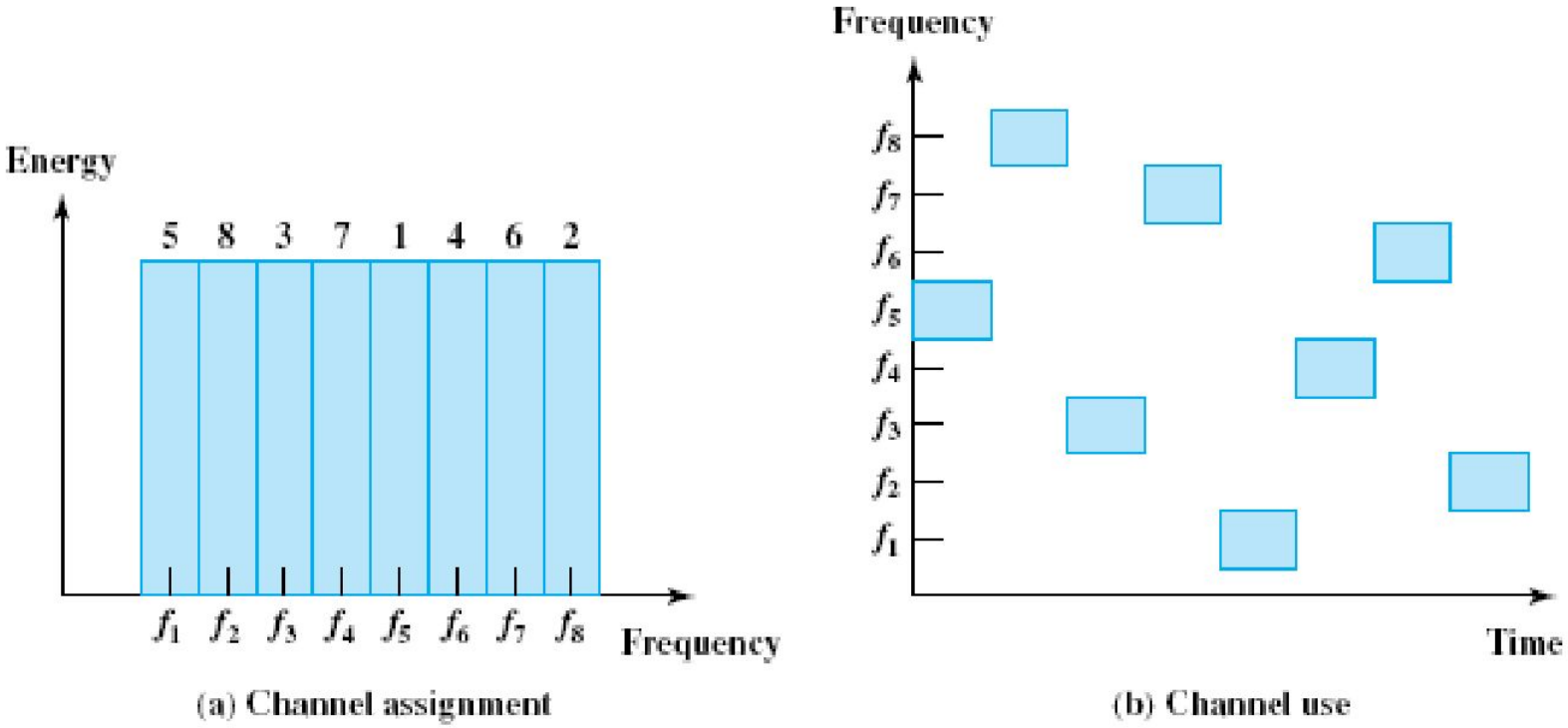

Figure 9.2 Frequency-Hopping Example

FHSS

- A typical block diagram for a frequency-hopping system is shown in the Figure.
- For transmission, binary data are fed into a modulator using some digital-to-analog encoding scheme, such as frequency shift keying (FSK) or binary phase shift keying (BPSK). The resulting signal is centered on some base frequency.
- **A pseudonoise (PN), or pseudorandom number, source serves as an index into a table of frequencies; this is the spreading code referred to previously □ spreading code**
- Each *k* bits of the PN source specifies one of the carrier frequencies. At each successive interval (each *k* PN bits), a new carrier frequency is selected. This frequency is then modulated by the signal produced from the initial modulator to produce a new signal with the same shape but now centered on the selected carrier frequency.
- On reception, the spread spectrum signal is demodulated using the same sequence of PN-derived frequencies and then demodulated to produce the output data.

Frequency Hopping CDMA

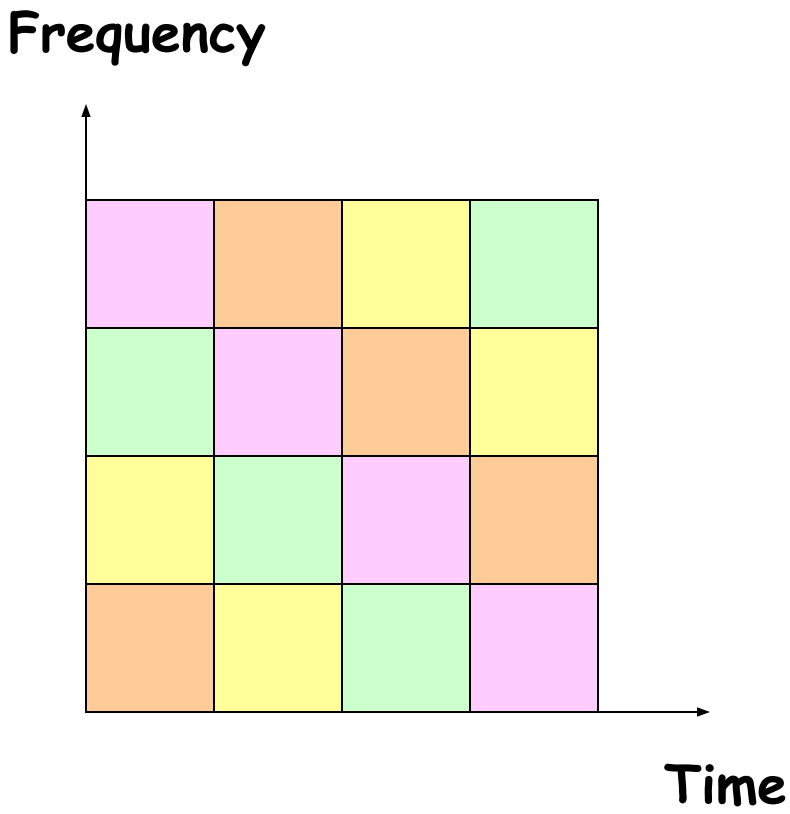

At each successive time slot, the frequency band assignments are reordered.

Each user employs a code that dictates the frequency hopping pattern.

Synchronization

- The previous figure implies that each signal synchronizes with each of the other signals.
- In practice, this is *not the case*.
- Frequency hops may collide, but it does not occur frequently.
  - How often collisions occur depends on the choice of *codes*.

Figure 6.28 *Frequency hopping spread spectrum (FHSS)*

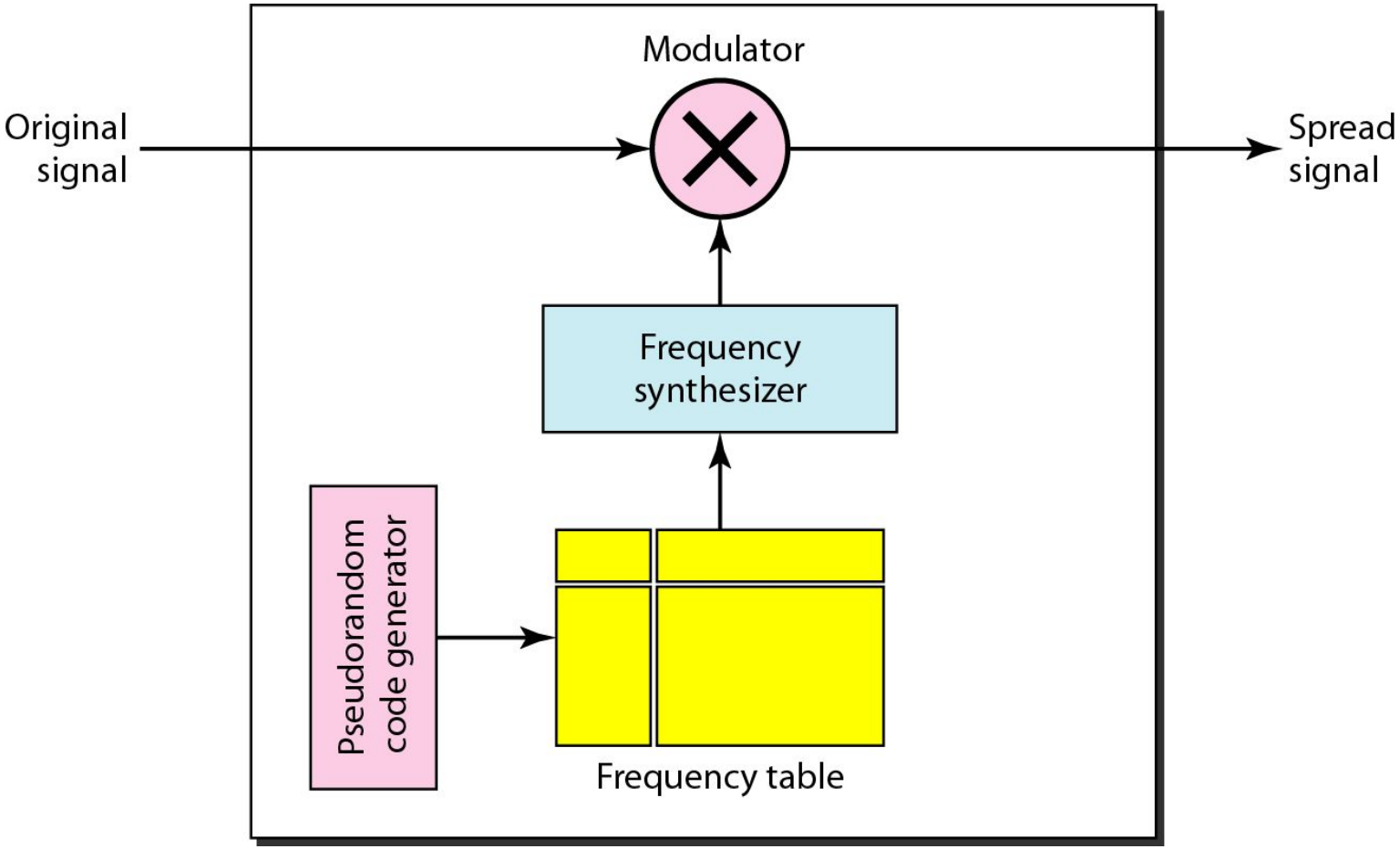

Figure 6.29 *Frequency selection in FHSS*

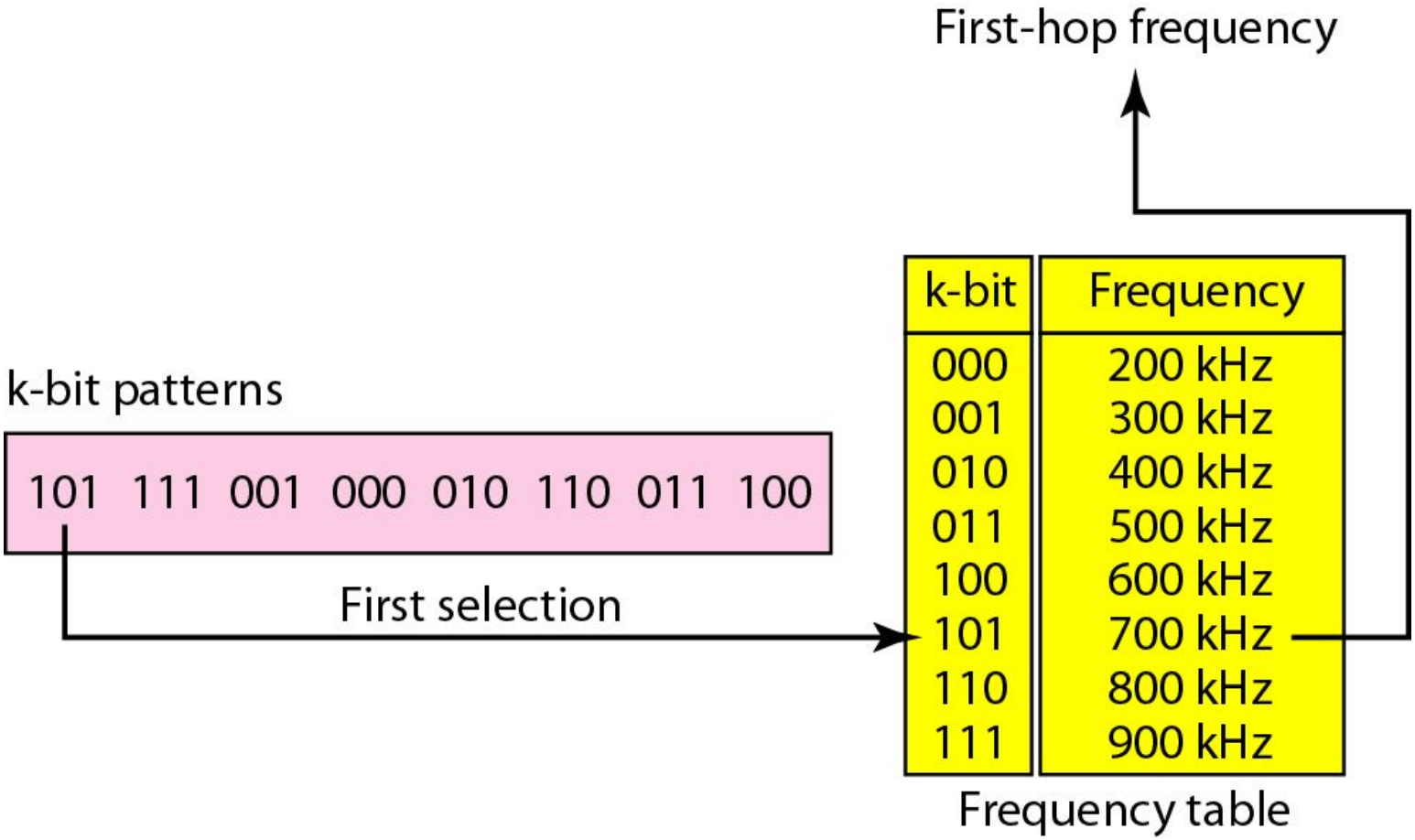

Figure 6.30 *FHSS cycles*

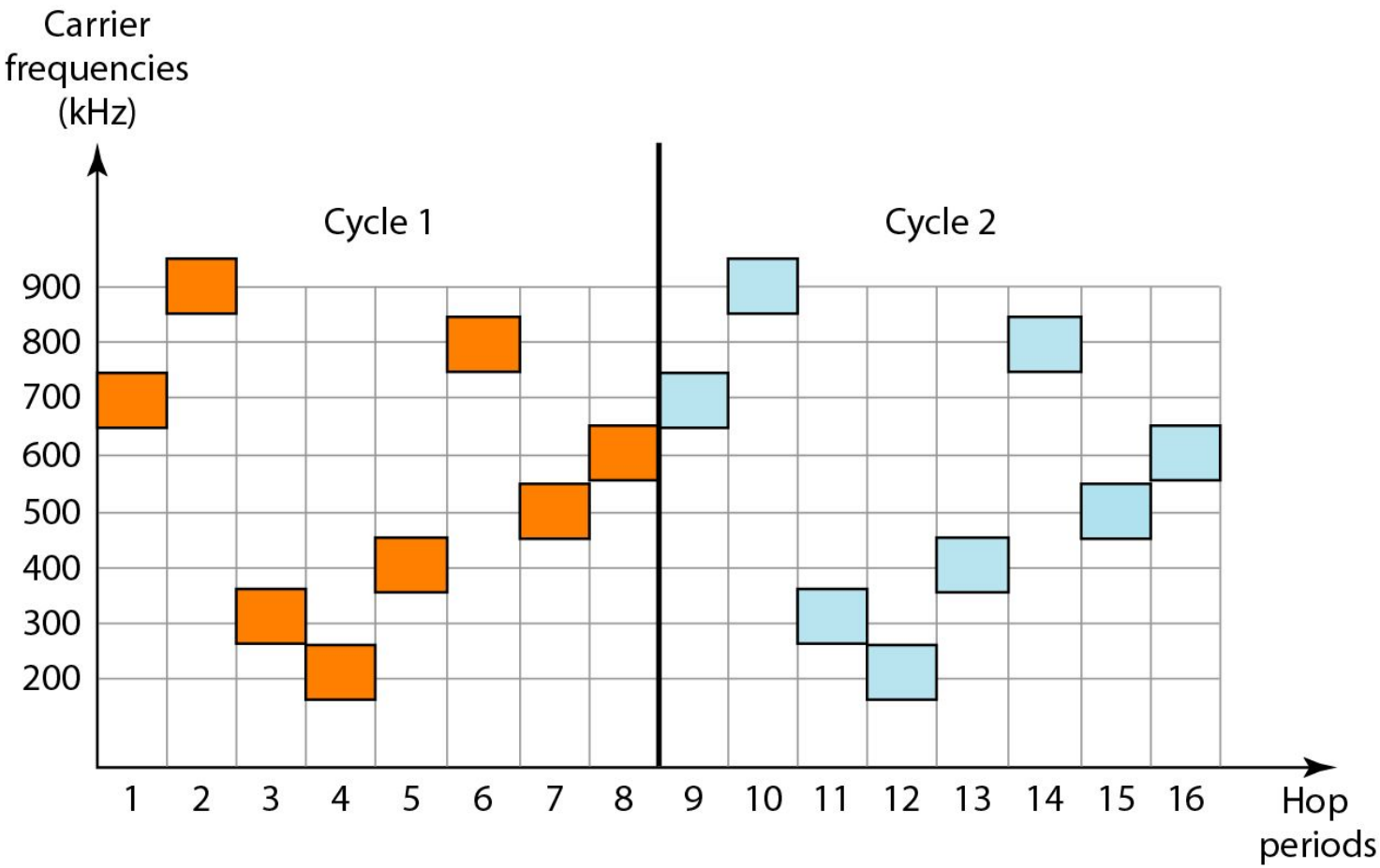

Figure 6.31 *Bandwidth sharing*

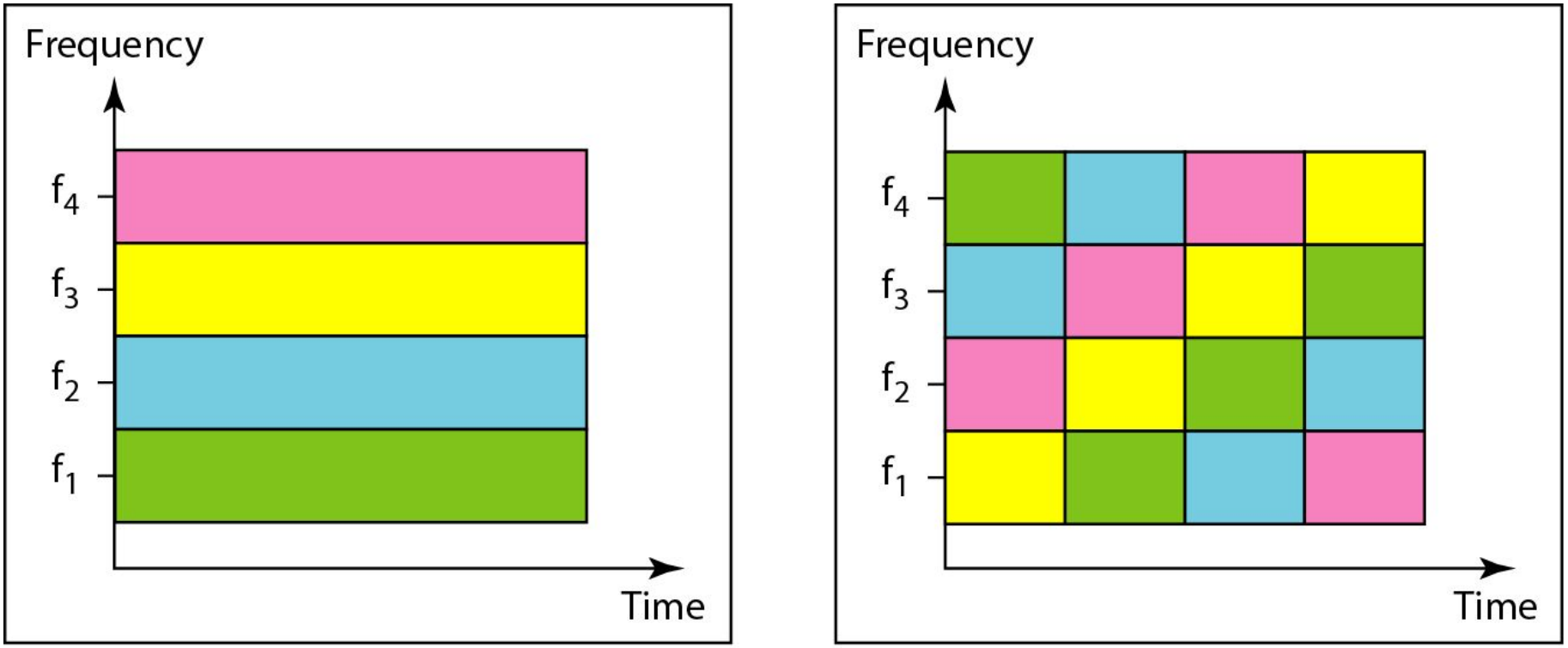

a. FDM

b. FHSS

Direct Sequence CDMA or DSSS

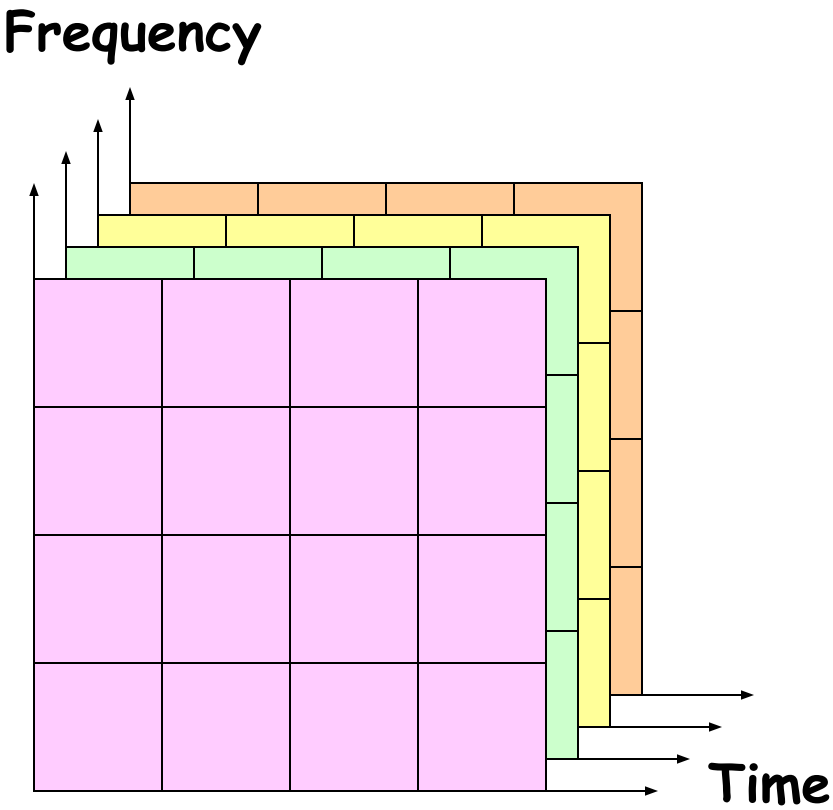

All users occupy the whole bandwidth all the time.

Signals of different users overlap with one other.

How can it be done?

Figure 6.32 *DSSS*

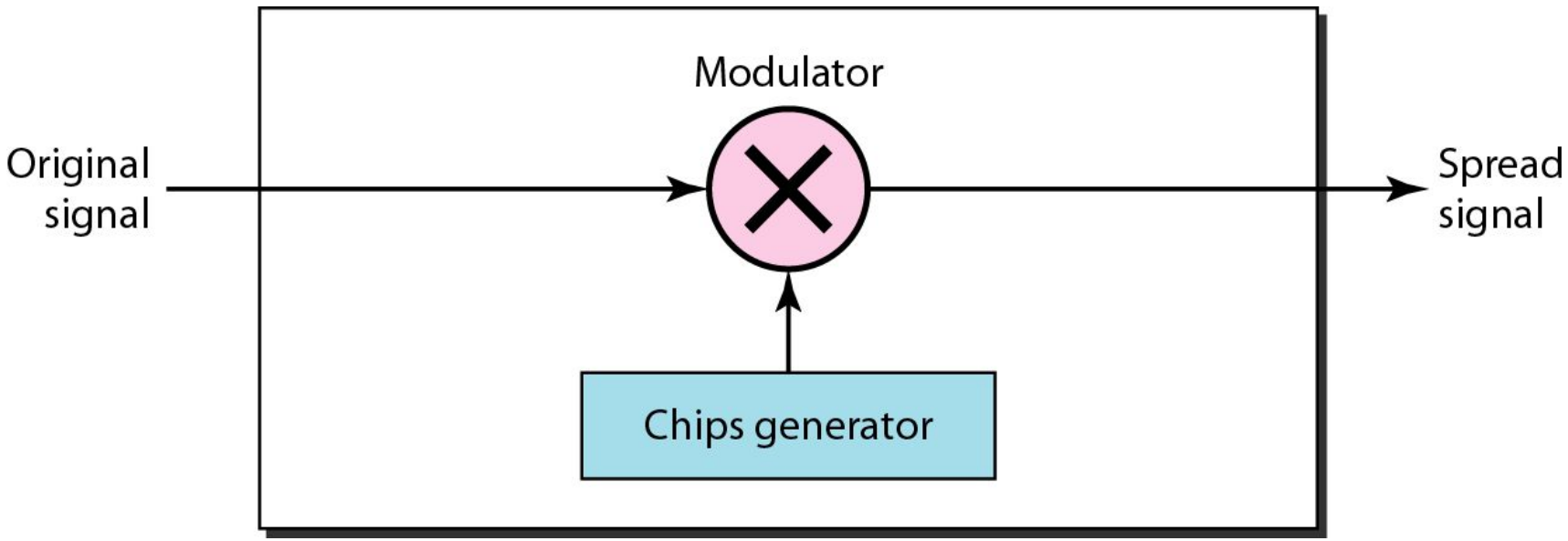

Figure 6.33 *DSSS example*

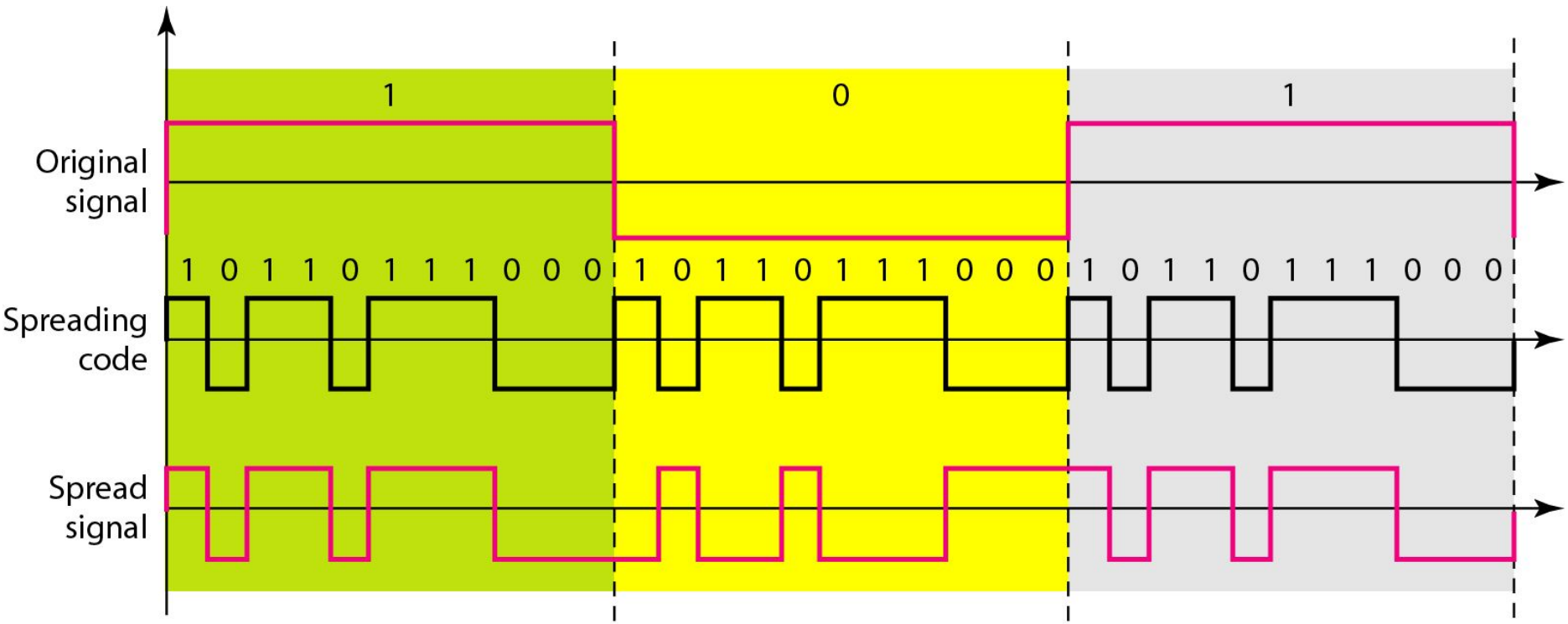

CDMA Encoding

- Each user is assigned a unique signature sequence (or code), denoted by $(c_1, c_2, \ldots, c_M)$. Its component is called a chip.

- Each bit, d_i, is encoded by multiplying the bit by the signature sequence:

$$Z_{i,m} = d_i \, c_m$$

Encoding Example

- Data bit

  $d_1 = -1$
- Signature sequence

  $(c_1, c_2, \ldots, c_8) = (+1, +1, +1, -1, +1, -1, -1, -1)$
- Encoder Output

  $(Z_{1,1}, Z_{1,2}, \ldots, Z_{1,8}) = (-1, -1, -1, +1, -1, +1, +1, +1)$

Bandwidth

- Note that the chip rate is much higher than the data rate.
- Consider an example.
  - Suppose the original data signal occupies a bandwidth of *W*.
  - *What is the bandwidth of the encoded signal?*

Spread Spectrum Technique

The bandwidth expands by a factor of M.

M is called spreading factor or processing gain.

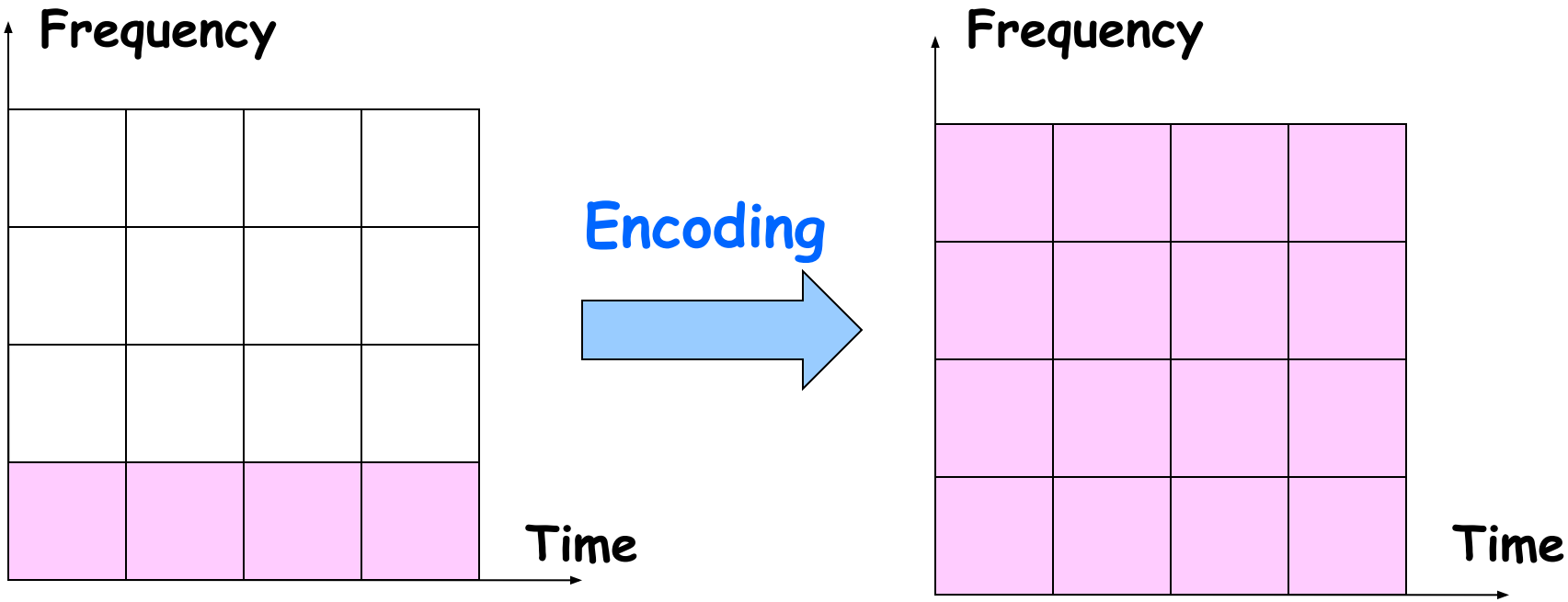

Spread Spectrum Technique: Methods by which a signal generated in a particular bandwidth is deliberately spread in the frequency domain, resulting in a signal with a wider bandwidth.

- **These techniques are used for a variety of reasons, including the establishment of secure communications, increasing resistance to natural interference and jamming, to prevent detection, and to limit power flux density (e.g. in satellite downlinks).**

CDMA Decoding

- Without interfering users, the receiver would receive the encoded bits, $Z_{i,m}$, and recover the original data bit, d_i, by computing:

$$d_i = \frac{1}{M} \sum_{m=1}^{M} Z_{i,m} c_m$$

CDMA Decoding Example

$$(c_1, c_2, \ldots, c_8) = (+1,+1,+1,-1,+1,-1,-1,-1)$$

$$(Z_{1,1}, Z_{1,2}, \ldots, Z_{1,8}) = (-1,-1,-1,+1,-1,+1,+1,+1)$$

multiply

$$(-1,-1,-1,-1,-1,-1,-1,-1)$$

add and divide by M

$$d_i = -1$$

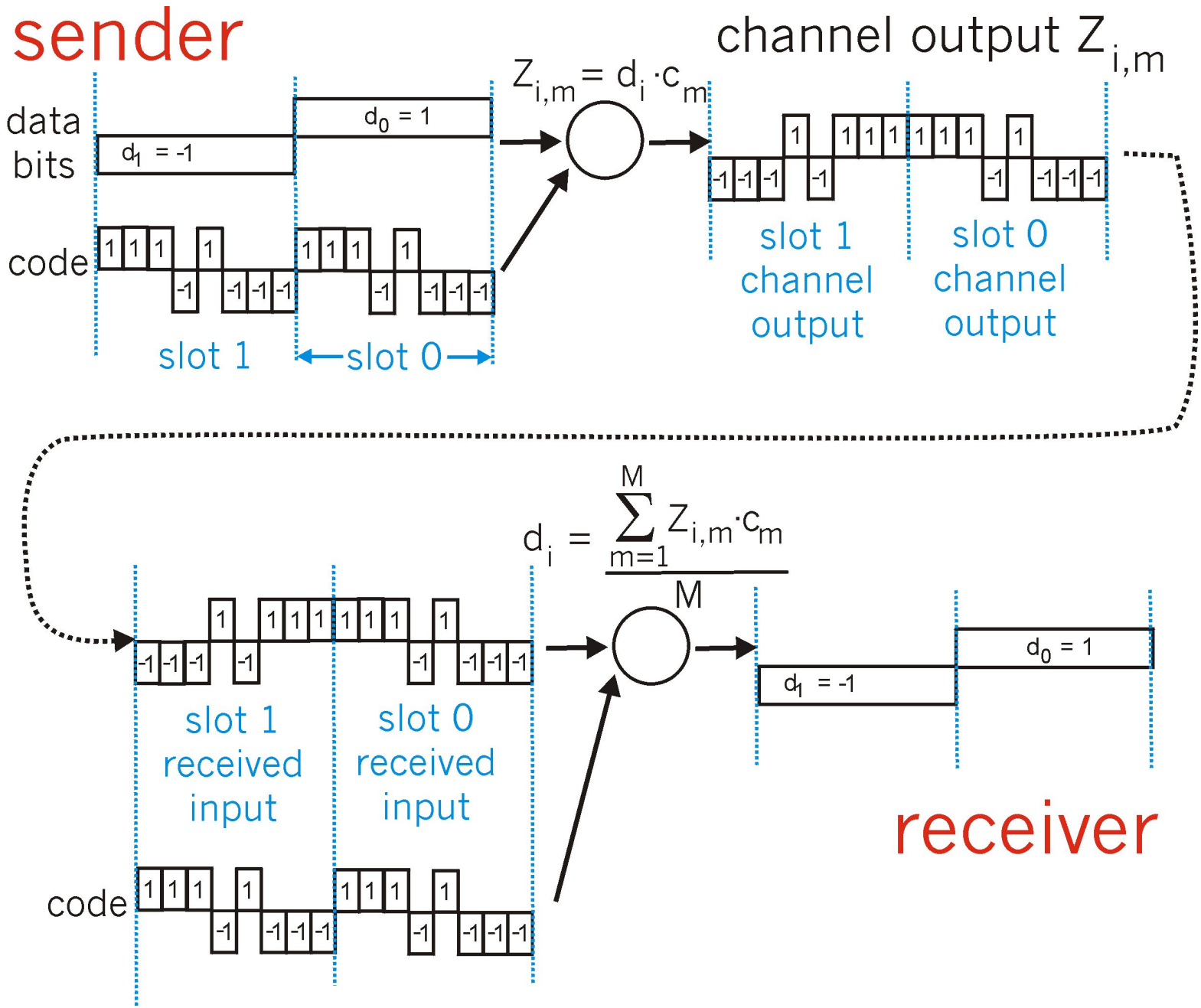
sender
data bits
$d_1 = -1$
$d_0 = 1$
code
slot 1
slot 0
$Z_{i,m} = d_i \cdot c_m$
channel output $Z_{i,m}$
slot 1 channel output
slot 0 channel output
$d_i = \frac{\sum_{m=1}^{M} Z_{i,m} \cdot c_m}{M}$
slot 1 received input
slot 0 received input
code
$d_1 = -1$
$d_0 = 1$
receiver

Multiuser Scenario

- If there are *N* users, the signal at the receiver becomes:

$$Z_{i,m}^{*} = \sum_{n=1}^{N} Z_{i,m}^{n}$$

- *How can a CDMA receiver recover a user's original data bit?*

2-user example

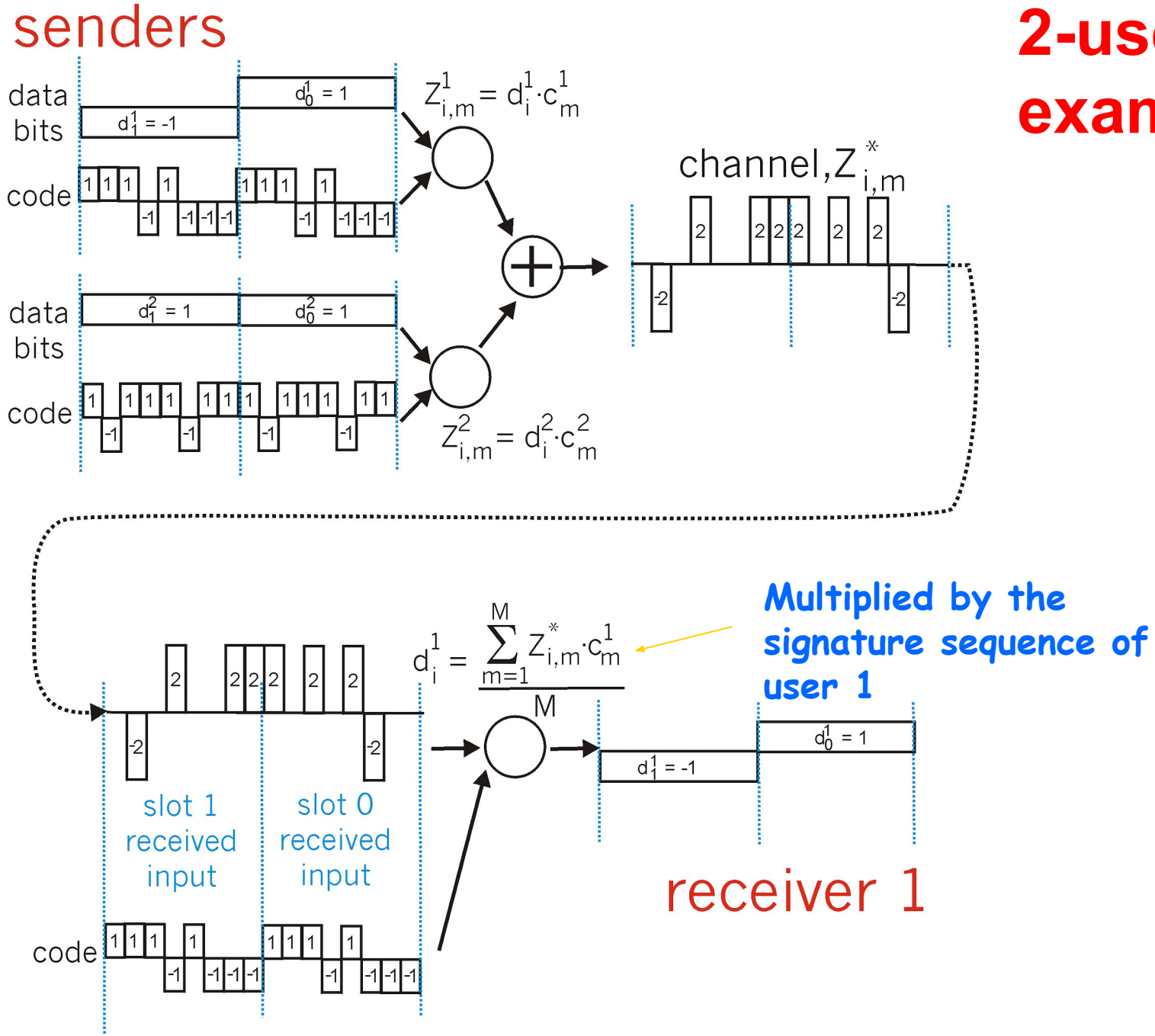

Signature Sequences

- In order for the receiver to be able to extract out a particular sender's signal, the CDMA codes must be of low correlation.
- Correlation of two codes, $(c_{j,1},\ldots, c_{j,M})$ and $(c_{k,1},\ldots, c_{k,M})$, are defined by inner product:

$$\frac{1}{M}\sum_{m=1}^{M} c_{j,m} c_{k,m}$$

The Meaning of Correlation

- What is correlation?
  - It determines how much similarity one sequence has with another.
  - It is defined with a range between –1 and 1.

Correlation Value	Interpretation
1	The two sequences match each other exactly.
0	No relation between the two sequences
–1	The two sequences are mirror images of each other.

Other values indicate a partial degree of correlation.

Generation of Signature Sequences

- How to **generate signature sequences of low correlation?**

Two classes:

- There are two classes of signature sequences that are widely used in CDMA systems.
  - Orthogonal Codes
  - Pseudo Noise Sequences (PN Sequences)

- Do self study for signature generation techniques

Spread Spectrum

- A spread-spectrum transmission offers three main advantages over a fixed-frequency transmission:
  - Spread-spectrum signals are **highly resistant to narrowband interference**. The process of re-collecting a spread signal spreads out the interfering signal, causing it to recede into the background.
  - Spread-spectrum signals are **difficult to intercept**. An FHSS signal simply **appears as an increase in the background noise to a narrowband receiver**. An eavesdropper would only be able to intercept the transmission if the pseudorandom sequence was known.
  - Spread-spectrum **transmissions can share a frequency band with many types of conventional transmissions with minimal interference.** The spread-spectrum signals add minimal noise to the narrow-frequency communications, and vice versa. As a result, **bandwidth can be utilized more efficiently.**

ISDN User Network Interface

- ISDN allows multiplexing of devices over single ISDN line
- Two interfaces
  - Basic ISDN Interface
  - Primary ISDN Interface

Basic ISDN Interface (1)

- Digital data exchanged between subscriber and NTE (network termination equipment) - Full Duplex
- Separate physical line for each direction
- Pseudoternary coding scheme
  - 1=no voltage, 0=positive or negative 750mV +/-10%
- Data rate 192kbps
- Basic access is two 64kbps B channels and one 16kbps D channel
- This gives 144kbps multiplexed over 192kbps
- Remaining capacity used for framing and sync

Basic ISDN Interface (2)

- B channel is basic user channel
  - Data
  - PCM voice
  - Separate logical 64kbps connections o different destinations
- D channel is used for control or data
  - LAPD frames
- Each frame 48 bits long
- One frame every 250μs

Frame Structure

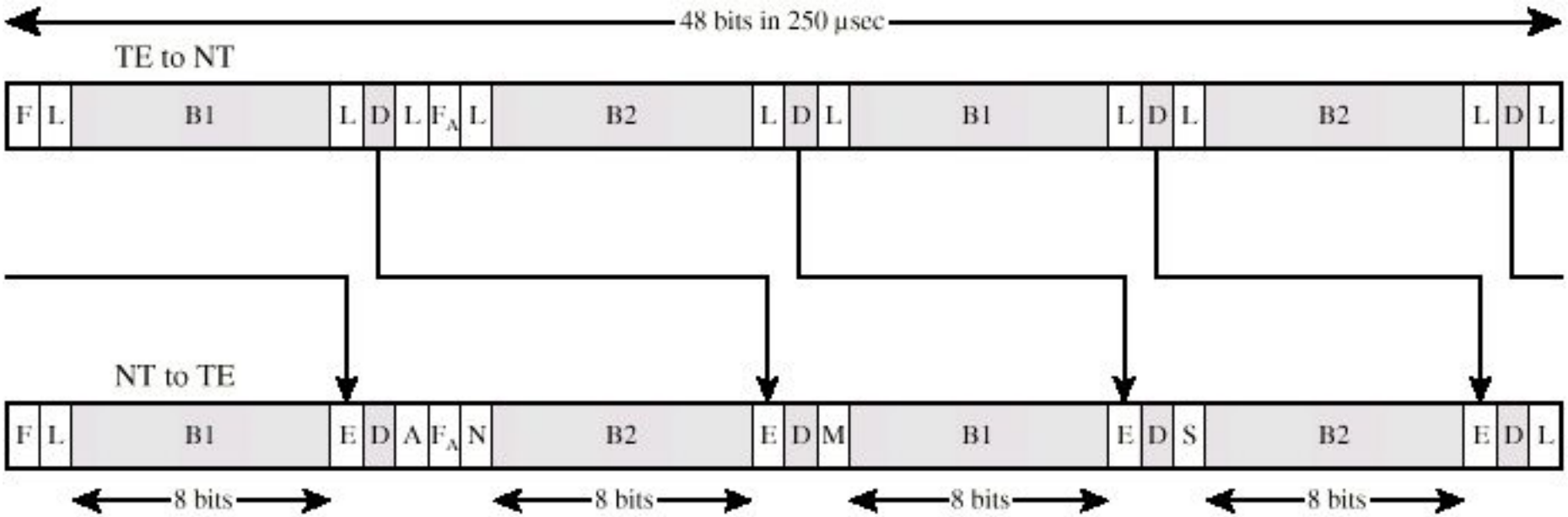

F = Framing bit
L = DC balancing bit
E = D-echo channel bit
A = Activation bit
F_A = Auxiliary framing bit
N = Set to opposite of F_A
M = Multiframing bit

B1 = B channel bits (16 per frame)
B2 = B channel bits (16 per frame)
D = D channel bits (4 per frame)
S = Spare bits

Primary ISDN

- Point to point
- Typically supporting PBX
  - PBX – Private Branch eXchange
  - PABX – private automatic branch exchange
    - *EPABX* – electronic private automatic branch exchange
  - CBX – computerized branch exchange
- 1.544Mbps
  - Based on US DS-1
  - Used on T1 services
  - 23 B plus one D channel
- 2.048Mbps
  - Based on European standards
  - 30 B plus one D channel
  - Line coding is AMI usingHDB3

Primary ISDN Frame Formats

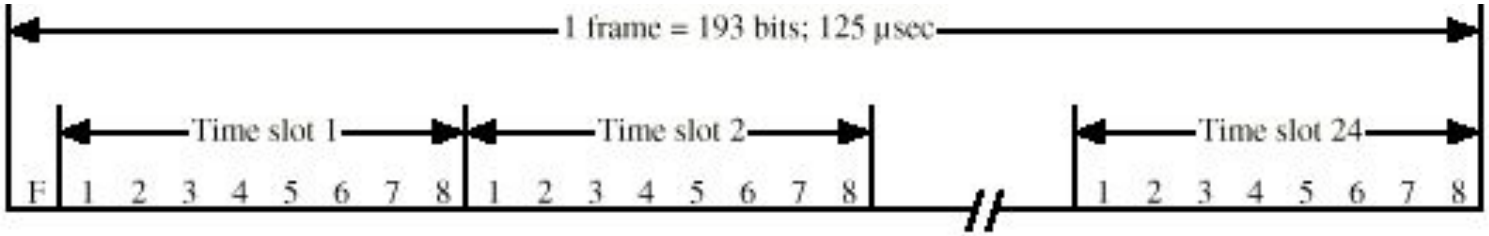

(a) Interface at 1.544 Mbps

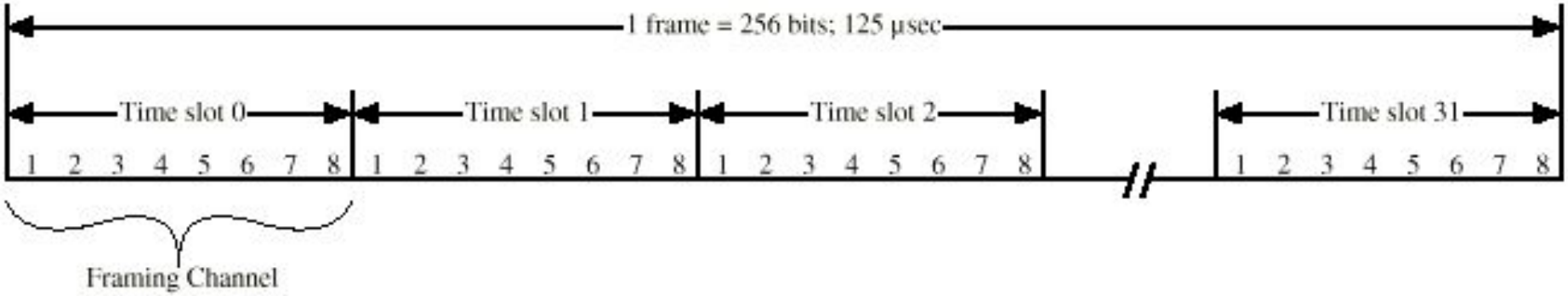

(b) Interface at 2.048 Mbps

Sonet/SDH

- Synchronous Optical Network (ANSI)
- Synchronous Digital Hierarchy (ITU-T)
- Compatible
- Signal Hierarchy
  - Synchronous Transport Signal level 1 (STS-1) or Optical Carrier level 1 (OC-1)
  - 51.84Mbps
  - Carry DS-3 or group of lower rate signals (DS1 DS1C DS2) plus ITU-T rates (e.g. 2.048Mbps)
  - Multiple STS-1 combined into STS-N signal
  - ITU-T lowest rate is 155.52Mbps (STM-1)

SONET Frame Format

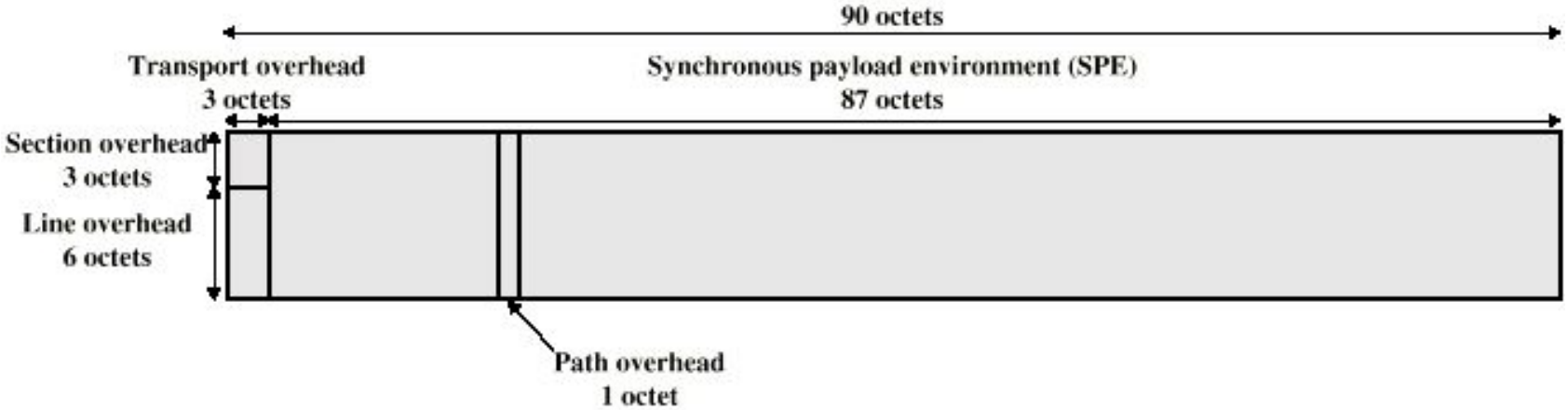

(a) STS-1 frame format

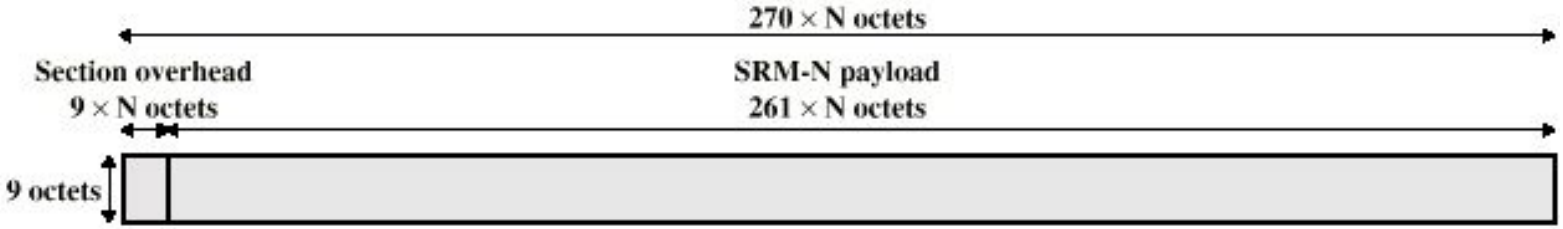

(b) STM-N frame format

SONET STS-1 Overhead Octets

Section Overhead	Framing A1	Framing A2	STS-ID C1
	BIP-8 B1	Orderwire E1	User F1
	DataCom D1	DataCom D2	DataCom D3
Line Overhead	Pointer H1	Pointer H2	Pointer Action H3
	BIP-8 B2	APS K1	APS K2
	DataCom D4	DataCom D5	DataCom D6
	DataCom D7	DataCom D8	DataCom D9
	DataCom D10	DataCom D11	DataCom D12
	Growth Z1	Growth Z2	Orderwire E2

(a) Transport Overhead

Trace J1
BIP-8 B3
Signal Label C2
Path Status G1
User F2
Multiframe H4
Growth Z3
Growth Z4
Growth Z5

(b) Path Overhead

Asymmetrical Digital Subscriber Line (ADSL)

- ADSL
- Link between subscriber and network
  - Local loop
- Uses currently installed twisted pair cable
  - Can carry broader spectrum
  - 1 MHz or more

ADSL Design

- Asymmetric
  - Greater capacity downstream than upstream
- Frequency division multiplexing
  - Lowest 25kHz for voice
    - Plain old telephone service (POTS)
  - Use echo cancellation or FDM to give two bands
  - Use FDM within bands
- Range 5.5km

ADSL Channel Configuration

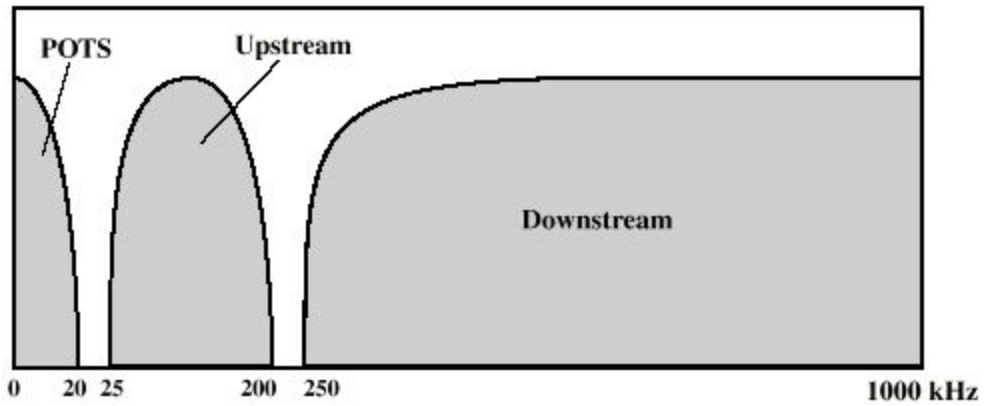

(a) Frequency-division multiplexing

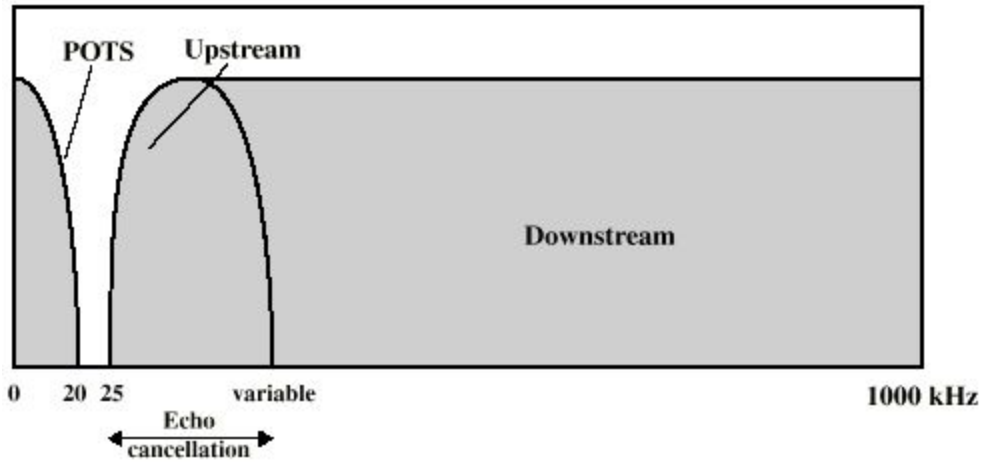

(b) Echo cancellation

Discrete Multitone

- DMT
- **Multiple carrier signals at different frequencies**
- Some bits on each channel
- 4kHz subchannels
- Send test signal and use subchannels with better signal to noise ratio
- 256 downstream subchannels at 4kHz (60kbps)
  - 15.36MHz
  - Impairments bring this down to 1.5Mbps to 9Mbps
- Similar to OFDM.

DMT Transmitter

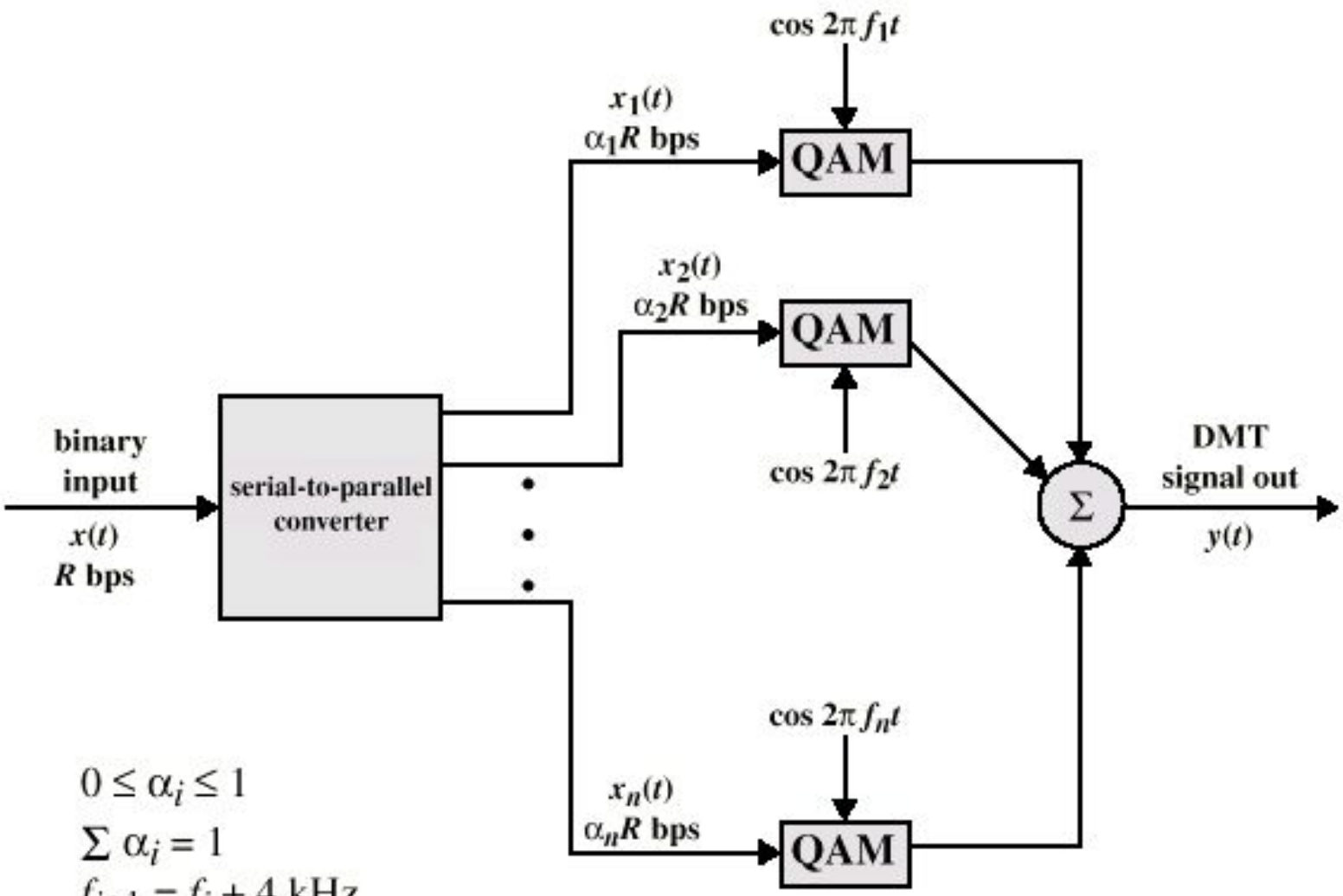

$0 \le \alpha_i \le 1$

$\sum \alpha_i = 1$

$f_{i+1} = f_i + 4\ \text{kHz}$

xDSL

- High data rate DSL (HDSL)
- Single line DSL (SDSL)

	ADSL	HDSL	SDSL	VDSL
Data rate	1.5 to 9 Mbps downstream 16 to 640 kbps upstream	1.544 or 2.048 Mbps	1.544 or 2.048 Mbps	13 to 52 Mbps downstream 1.5 to 2.3 Mbps upstream
Mode	Asymmetric	Symmetric	Symmetric	Asymmetric
Copper pairs	1	2	1	1
Range (24-gauge UTP)	3.7 to 5.5 km	3.7 km	3.0 km	1.4 km
Signaling	Analog	Digital	Digital	Analog
Line code	CAP/DMT	2B1Q	2B1Q	DMT
Frequency	1 to 5 MHz	196 kHz	196 kHz	≥ 10 MHz
Bits/cycle	Varies	4	4	Varies

Required Reading

- Stallings chapter 8
- Forouzan chapter 6
- Web sites on
  - ADSL
  - SONET